KWC DOMO

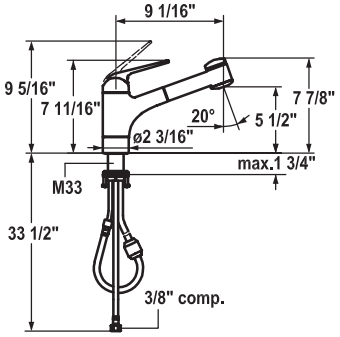

KWC-No.	Finish
10.061.033.000	chrome
A 9 1/16", flexible connection hoses	
10.061.033.127	splendure™ stainless steel
A 9 1/16", flexible connection hoses	

Kitchen

Single-lever mixer
- ShieldProtect - Tightly sealed
- Pull-out spray
  - up to 27 9/16" pull-out length
  - SprayLock - lockable jet spray
  - PowerClean - needle spray mode, with automatic diverter reset
  - hose surface to fit faucet surface
- Hose guide, swiveling 130°
- KWC cartridge L 39 - universal
  - with ceramic discs
  - flow rate and temperature continuously variable
  - temperature and flow rate limitation
- Flexible connection hoses 3/8" compression
- Fastening by means of threaded sleeve M33 x 1.5
- Mounting hole size ø1 3/8"

Flow rate max 1.75 gpm (60 psi)
Flow rate needle spray max 1.75 gpm (60 psi)
Acoustic group I